DRAKE

# INSTRUCTION MANUAL




## MODEL MN-2000

### MATCHING NETWORK

R. L. DRAKE COMPANY, MIAMISBURG, OHIO, U.S.A.



## LIMITED WARRANTY

*R. L. DRAKE COMPANY warrants to the original purchaser that this product shall be free from defects in material (except tubes and RF output transistors) or workmanship for ninety (90) days from the date of original purchase.*

*During the warranty period the R. L. DRAKE COMPANY or an authorized Drake service facility will provide free of charge both parts (except tubes and RF output transistors) and labor necessary to correct defects in material or workmanship.*

*To obtain such warranty service, the original purchaser must:*

*(1) Complete and send in the Warranty Registration Card.*

*(2) Notify R. L. DRAKE COMPANY or its nearest authorized service facility, as soon as possible after discovery of a possible defect, of:*

*(a) The model number and serial number, if any;*

*(b) The identity of the seller and the approximate date of purchase;*

*(c) A detailed description of the problem, including details on the electrical connection to associated equipment and the list of such equipment.*

*(3) Deliver the product to the R. L. DRAKE COMPANY or the nearest authorized service facility, or ship the same in its original container or equivalent, fully insured and shipping charges prepaid.*

*Correct maintenance, repair and use are important to obtain proper performance from this product. Therefore, carefully read the Instruction Manual. This warranty does not apply to any defect that R. L. DRAKE COMPANY determines is due to:*

*(1) Improper maintenance or repair, including the installation of parts or accessories that do not conform to the quality and specifications of the original parts.*

*(2) Misuse, abuse, neglect or improper installation.*

*(3) Accidental or intentional damage.*

*All implied warranties, if any, terminate ninety (90) days from the date of the original purchase.*

*The foregoing constitutes R. L. DRAKE COMPANY'S entire obligation with respect to this product, and the original purchaser and any user or owner shall have no other remedy and no claim for incidental or consequential damages. Some states do not allow limitations on how long an implied warranty lasts or do not allow the exclusion or limitation of incidental or consequential damages, so the above limitation and exclusion may not apply to you.*

*This warranty gives specific legal rights and you may also have other rights which vary from state to state.*

**R. L. DRAKE COMPANY**
**540 Richard Street • Miamisburg, Ohio 45342**



PRINTED IN U.S.A.

## TABLE OF CONTENTS


| | | Page |
|---|---|---|
| CHAPTER I | INTRODUCTION | 1–1 |
| 1–1. | DESCRIPTION | 1–1 |
| | SPECIFICATIONS | 1–2 |
| CHAPTER II | INSTALLATION | 2–1 |
| 2–1. | UNPACKING | 2–1 |
| 2–2. | LOCATION | 2–1 |
| 2–3. | CONNECTION | 2–1 |
| CHAPTER III | OPERATION | 3–1 |
| 3–1. | TUNE UP PROCEDURE | 3–1 |
| 3–2. | OFF-THE-AIR TUNING | 3–1 |
| 3–3. | USE WITH TRANSCEIVERS AND T/R COMBINATIONS | 3–2 |
| 3–4. | DIRECT OPERATION | 3–2 |
| CHAPTER IV | MAINTENANCE | 4–1 |
| 4–1. | SERVICE DATA | 4–1 |
| 4–2. | PARTS ORDERING | 4–1 |


## LIST OF ILLUSTRATIONS


| Figure | | Page |
|---|---|---|
| 1–1. | MODEL MN–2000 MATCHING NETWORK | 1–2 |
| 2–1. | VIEWING ANGLE OPTIONS | 2–2 |
| 3–1. | FRONT PANEL CONTROLS | 3–3 |
| 4–1. | MODEL MN–2000 MATCHING NETWORK SCHEMATIC DIAGRAM | 4–3 |

# CHAPTER 1
# INTRODUCTION

## 1-1. DESCRIPTION.

The MN–2000 is a wide range, impedance-matching network with a built-in calibrated directional wattmeter and an antenna switching arrangement. It is a versatile "tool" which allows the maximum transfer of power to an antenna system. The MN–2000 impedance-matching network has the following capabilities:

a. Measures feedline VSWR, then reduces the VSWR to 1:1 at the transmitter output.

b. Monitors transmitter power output in Watts directly and continuously.

c. Attenuates 2nd harmonic output from transmitter by 25 to 35 dB; thus it may eliminate the need for a low-pass TVI filter.

d. Matches an antenna to a transmitter having fixed loading.

e. Provides optimum match with multiband antennas.

f. Precisely matches the transmitter to an antenna across a complete amateur band.

g. Permits "off the air" transmitter tuning and antenna matching at low power using a dummy load.

h. Eliminates reloading the transmitter when switching from "barefoot" to linear amplifier operation as the antenna load can always be 50 Ohms.

i. Matches the transmitter output to a linear amplifier which does not have 50 Ohm input impedance.

j. Helps localize trouble by comparing the transmitter output into the antenna and into a dummy load.

k. Provides switching for up to three separate antennas or two antennas and a dummy load.

l. Can be switched in or out with front panel control. Front panel controls are provided for the adjustment of resistive and reactive tuning and VSWR calibration, bandswitching, selection of Watts or VSWR functions of the meter, and antenna or dummy load switching. The rear panel has a ground post and four type SO-239 connectors, one for input, two for outputs to antennas, and one for an alternate antenna or dummy load. The metering circuit employs two type 1N295 rectifiers. Frequencies outside the amateur bands can be matched, with some reduction in the impedance range. For highly resistive loads, VSWR well in excess of 5:1 can be matched.




*Figure 1–1. Model MN–2000 Matching Network*

## SPECIFICATIONS

| | |
|---|---|
| Frequency Coverage: | 3.5 to 4.0 MHz.<br>7.0 to 7.3 MHz.<br>14.0 to 14.35 MHz.<br>21.0 to 21.45 MHz.<br>28.0 to 29.7 MHz. |
| Input Impedance: | 50 Ohms (resistive). |
| Load Impedance: | 50 Ohm coax with VSWR of 5:1 or less<br>75 Ohm coax at a lower VSWR can be used. |
| Power Capability: | 1000 Watts RF average continuous Duty, 2000 Watts PEP. |
| Wattmeter Accuracy: | ± 5% of reading + 2 Watts on 200 Watt scale and ± 5% of reading + 20 Watts on 2000 Watt scale. |
| Insertion Loss: | 0.5 dB or less on each band after tuning. |
| Dimensions: | 5-1/2 inches high, 10-3/4 inches wide, 14-3/8 inches deep (including connectors). |

# CHAPTER II
# INSTALLATION

## 2-1. UNPACKING.

Carefully remove the unit from the shipping carton and examine it for evidence of damage. If any damage is discovered, immediately notify the transportation company that delivered the unit. Be sure to keep the shipping carton and packing material as the transportation company will want to examine them if there is a damage claim. Keep the carton and packing material even if no shipping damage occurs. Having the original carton available makes packing the unit much easier to store it or return it to the factory for service.

NOTE

Fill out the enclosed registration card and return it to the factory immediately to insure registration and validation of the warranty.

## 2-2. LOCATION.

The MN–2000 will work properly in almost any location. Select a location on the operating table that will allow you to reach the control knobs easily. Figure 2-1 illustrates recommended viewing angle options using the hardware furnished with the unit.

## 2-3. CONNECTION.

Connect the RF output of a transmitter or linear amplifier to the XMTR connector at the rear of the MN–2000, using 50 Ohm coaxial cable such as RG8/U. Cable length is not critical. Connect the coaxial line feeding the antenna to the ANT-1 or ANT-2 connector of the MN–2000. In installations using a transceiver, or transmitter/receiver combinations, the MN–2000 should be the last item the outgoing RF signal passes through before entering the feedline to the antenna. The effects of this on receiver operation are discussed in the Operating Instructions, Chapter III of this manual. Bond the GROUND post of the MN–2000 to the station ground with a short piece of heavy braid. The connector labeled ALT may be used to connect a third antenna or a dummy load.

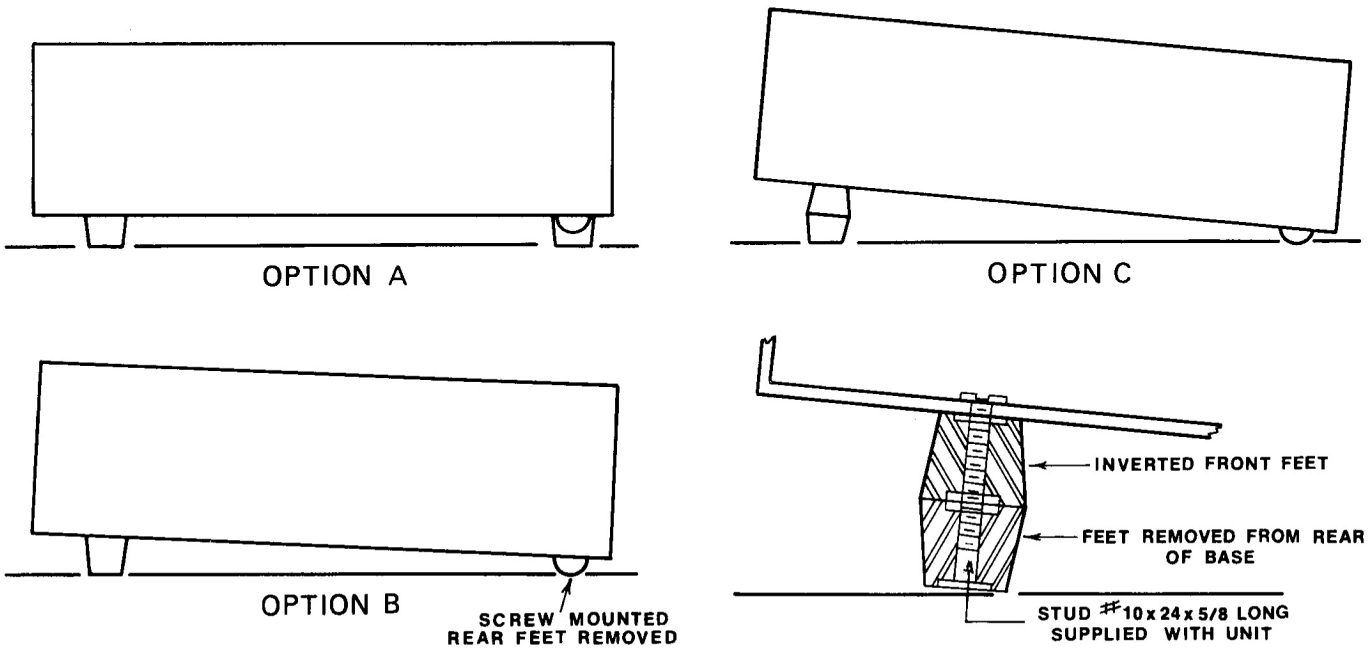


*Figure 2–1. Viewing Angle Options*

# CHAPTER III
# OPERATION

## 3-1. TUNE UP PROCEDURE.

CAUTION

An antenna or dummy load MUST be connected to the MN–2000 before energizing the transmitter to avoid damage to both units. MN–2000 tuning should be done with low transmitter power whenever possible. DO NOT EXCEED 125 WATTS DURING TUNE UP.

Preset the operating controls as follows:

Bandswitch to desired band.

RESISTIVE TUNING to 5.

REACTIVE TUNING to 5.

PUSH TO SET fully counterclockwise.

Meter switch to VSWR.

Antenna Selector to either MATCH 1 or MATCH 2 for the antenna desired.

An ALTERNATE position is provided on the Antenna Selector to switch in a third antenna or dummy load. The tuning network is not connected in the ALTERNATE position.

All of the following operations may be done without the use of the linear amplifier in installations using transmitter/linear combinations.

Energize transmitter, apply low power to the MN–2000 and adjust the transmitter plate tuning to resonance. The VSWR meter should read upscale. Vary the RESISTIVE TUNING until the VSWR dips, then turn the REACTIVE TUNING control clockwise to bring the VSWR indication slightly upscale. Readjust the RESISTIVE TUNING for a dip. If this dip is lower than the first dip, you are tuning in the right direction, and should continue to alternately move the REACTIVE tuning control clockwise and tune the RESISTIVE tuning for a dip until a minimum VSWR indication is obtained. If the second dip reads higher on the meter than the first dip, the REACTIVE TUNING control must be turned counterclockwise a short distance, and the RESISTIVE TUNING adjusted for a dip. Continue alternating these adjustments until a minimum VSWR reading is reached.

If the dips observed during the tuning procedure are so far downscale that it becomes difficult to tell whether a particular dip is lower or higher than the preceding one, increase meter sensitivity and get readings that are farther upscale by turning the PUSH TO SET knob clockwise. With this added sensitivity it may not be possible to dip to the meter zero, but any residual reading will represent a very small reflected power level, probably less than 0.1 Watt.

When the MN–2000 has been adjusted to the lowest possible dip, it is properly tuned to present a 50 Ohm resistive load to the transmitter. Make a note of the settings of the RESISTIVE and REACTIVE TUNING controls and the Band switch setting. The next time you operate on this band, you can tune up quickly by returning the MN–2000 controls to the same settings.

Adjust the transmitter plate tuning and loading controls as directed by the transmitter instruction book. Push in on the PUSH TO SET control, and rotate the knob clockwise until the Meter pointer lines up with the SET mark (full scale) on the meter face. Release the knob. The meter is now calibrated for VSWR measurements.

## 3-2. OFF-THE-AIR TUNING.

The MN–2000 can be tuned up with minimum interference if a 50 Ohm dummy load is used. The dummy load used must be capable of handling the full transmitter power output. Connect the 50 Ohm load to the ALT connector on the MN–2000, switch the MN–2000 Antenna Selector to ALTER-

NATE, connect the transmitter RF output to the MN–2000 XMTR connector and turn on the transmitter.

The exciter and linear amplifier can now be tuned to match the 50 Ohm dummy load. Turn off the linear amplifier and reduce the transmitter power output without changing the transmitter loading. As little as 20 Watts input to the MN–2000 is enough for tuning. Set the Band switch to the desired band, and switch the Antenna Selector switch to match the correct antenna. Tune the MN–2000 for minimum VSWR setting. Push in on the PUSH TO SET knob and turn it clockwise until the Meter indicates the same as forward power. Release the knob. The Meter now indicates reflected power on the power scale.

### 3-3. USE WITH TRANSCEIVERS AND T/R COMBINATIONS.

Adjustment of the MN–2000 with a transceiver is done exactly as described above. Since the received signal will be passed through the MN–2000, tune up is necessary. If this is not done, the received signal will be attenuated by the MN–2000 whenever the Band switch setting is not the same as the band being tuned. DIRECT positions of the Antenna Selector switch may be used instead of tuning up the MN–2000.

### 3-4. DIRECT OPERATION.

In the DIRECT 1 and DIRECT 2 positions of the Antenna Selector switch, the matching network is switched out of the circuit and the transmitter is connected directly to the antenna. In the DIRECT position the VSWR of the antenna may be displayed on the Meter with some power supplied to the MN–2000 (as little as 20 Watts is sufficient). Switch the Meter switch to VSWR position. Depress the PUSH TO SET knob and rotate the sensitivity control until the Meter needle rests at the SET mark. Release the knob. The Meter will display VSWR directly on the VSWR scale. In all positions of the Antenna Selector switch the wattmeter is in the circuit and the output of the transmitter may be observed on the Meter.

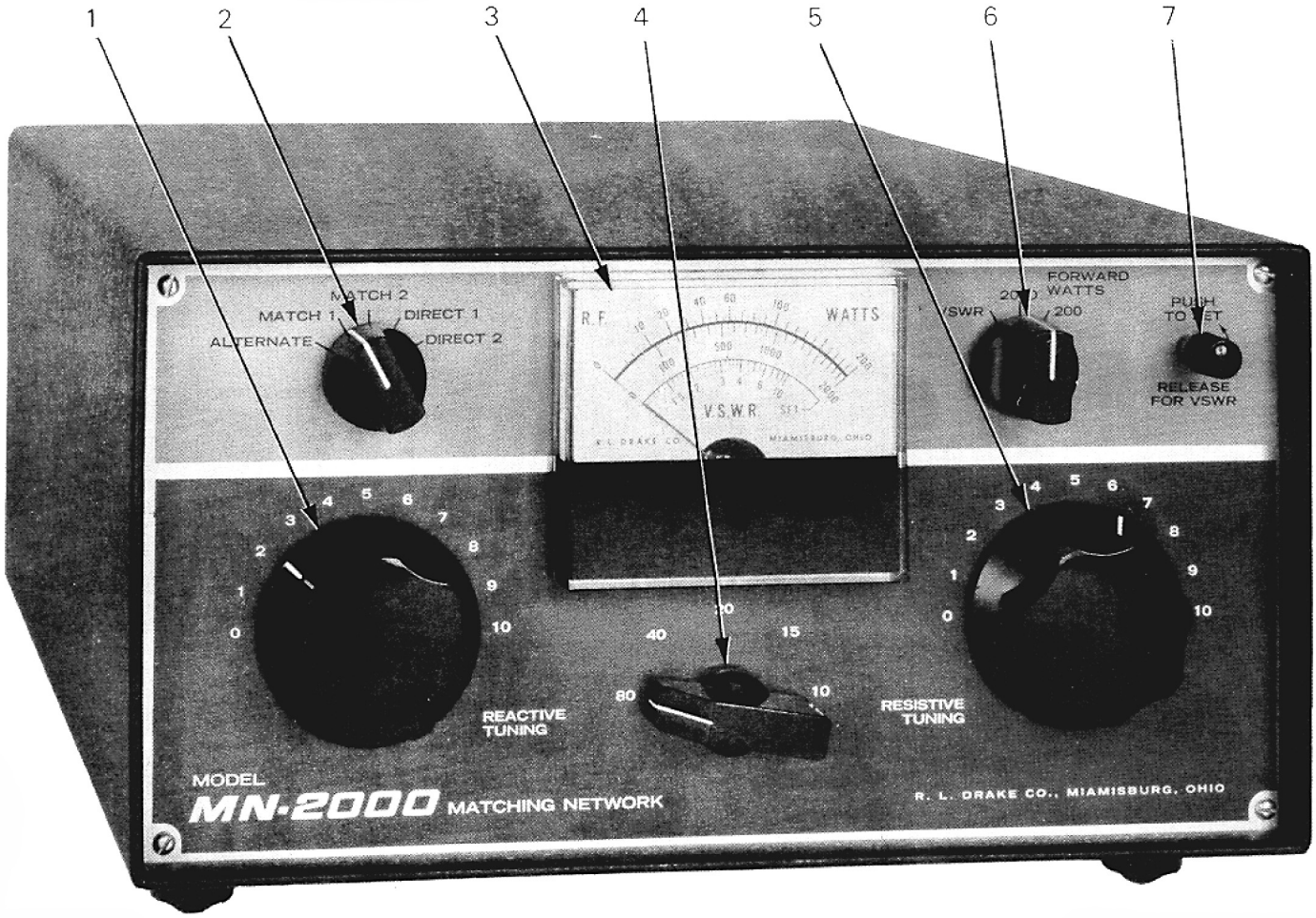


*Figure 3–1. Front Panel Controls*

1. REACTIVE TUNING control: Tunes out the reactive component of the antenna impedance.
2. Antenna Selector switch: Selects either of two antennas to be matched by the MN–2000 in the MATCH 1 or MATCH 2 position. In the DIRECT 1 and DIRECT 2 positions, the tuning network is removed and the VSWR of the antennas is displayed directly on the meter. ALTERNATE position may be used to switch in a dummy load or another antenna.
3. Meter: Displays forward power in Watts or VSWR as selected by Meter switch 6.
4. Band switch: Selects the fixed capacitors and inductors needed for each band.
5. RESISTIVE TUNING control: Varies the resistive component of the MN–2000 to achieve a match with the resistive component of the antenna impedance.
6. Meter switch: Connects the proper circuitry to allow the meter to display either forward power in Watts, or VSWR, as desired. In the FORWARD positions two ranges are provided, 200 and 2000 Watts full scale.
7. PUSH TO SET control: Varies the sensitivity of the meter circuit and calibrates the meter for VSWR measurement.

# CHAPTER IV
# MAINTENANCE

## 4-1. SERVICE DATA.

The MN–2000 should be practically maintenance free, as it is a passive device. If either, or both, of the 1N295 diode rectifiers for the wattmeter are damaged, they must be replaced with diodes of the same type. Substitution of different diodes may seriously degrade the accuracy of the wattmeter. If any problems arise that cannot be corrected, either return the MN–2000 to your dealer or write to R. L. Drake Company, Service Department, describing your problem in full, including external connections, control settings, type of antenna, transmitter, etc. Do not return your MN–2000 to the factory without proper authorization.

We will check and align your unit at the factory for a nominal fee if it has not been tampered with. Transportation charges are extra. Any necessary repairs will be made on a time and material basis. Please write or call the factory for authorization before returning your unit for alignment or service. Address your request for authorization to:

R. L. Drake Company
540 Richard Street
Miamisburg, Ohio 45342
ATTN: Customer Service Department

Telephone: (Area Code 513) 866-3211
Telex No. 288-017

## 4-2. PARTS ORDERING.

Replacement parts are available from the R. L. Drake Company at a nominal cost. When ordering replacement parts specify the serial number of the MN–2000, schematic reference designations, values, tolerances and voltage ratings as applicable.

# NOTES

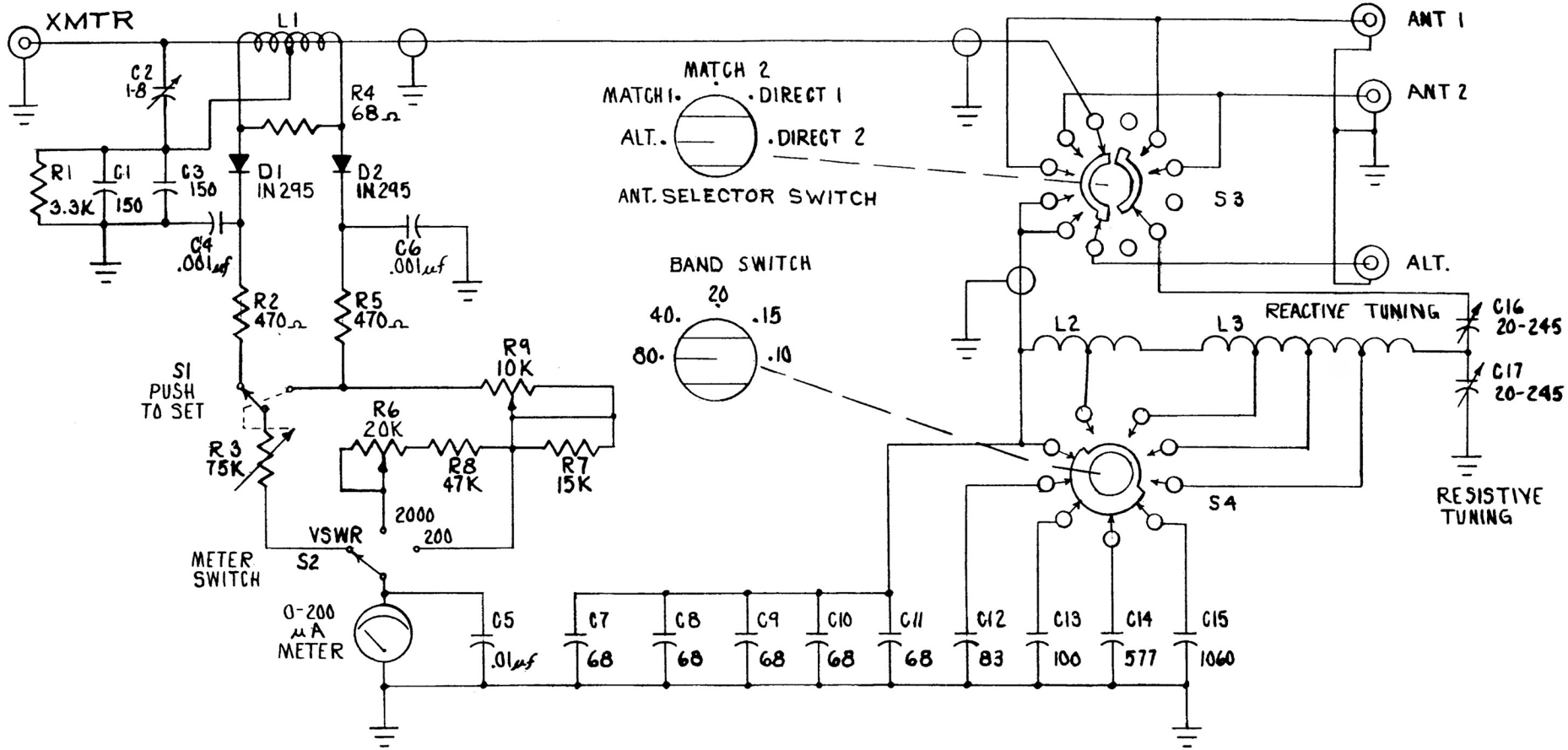


*Figure 4–1. Model MN–2000 Matching Network Schematic Diagram*

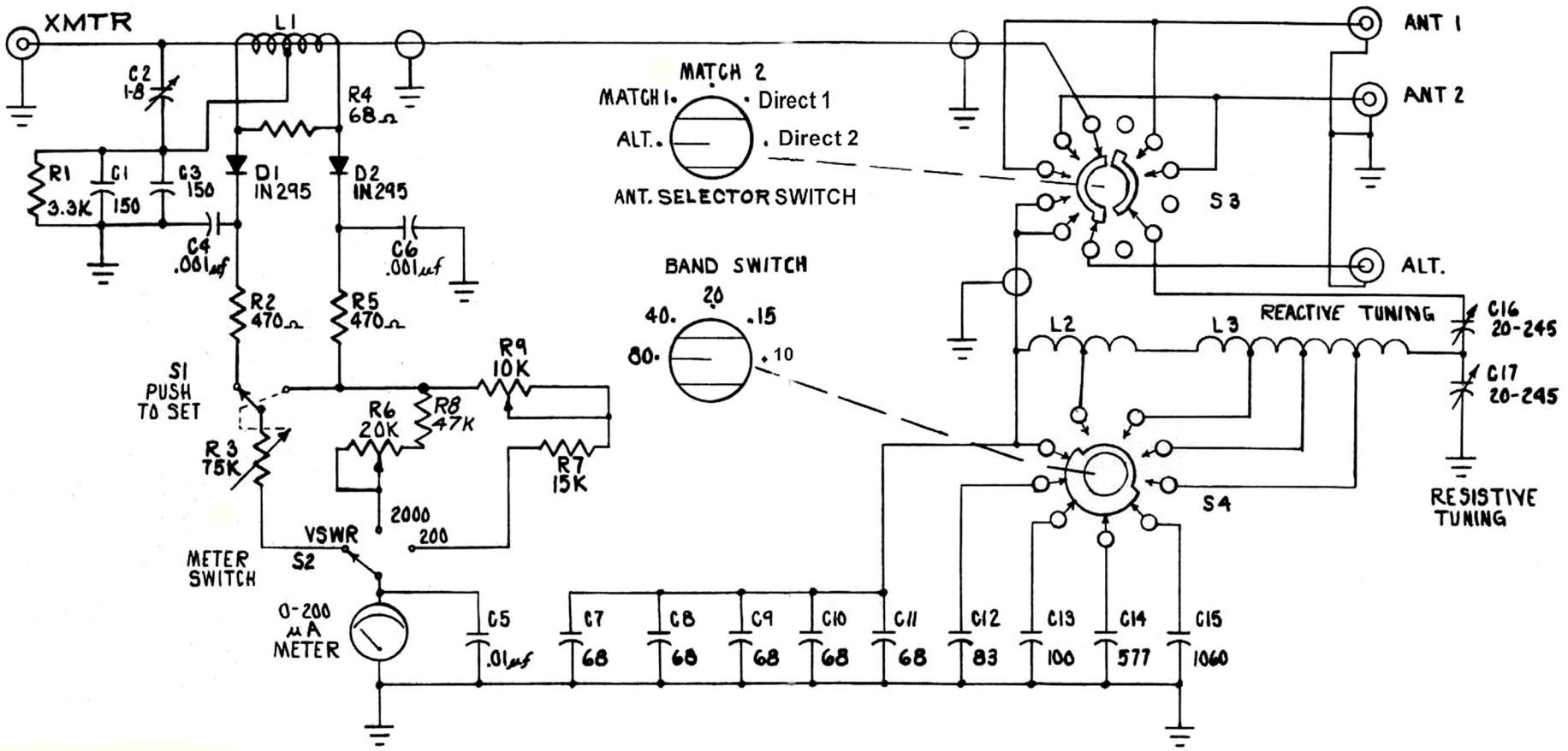


*Figure 4–1. Model MN–2000 Matching Network Schematic Diagram*



## DRAKE AMATEUR PRODUCTS

| | |
|---|---|
| *R-4C* | *Receiver, covers the 160 meter through 10 meter amateur bands and up to fifteen additional 500 kHz ranges. It has 8-pole crystal filter selectivity with passband tuning and transceives with the T-4XC with excellent sensitivity.* |
| *T-4XC* | *Transmitter, covers the 160 through 10 meter amateur bands and most other frequencies between 1.5 and 30 MHz. It has 8-pole crystal filters for sideband selection. It may be used to transceive with the R-4C.* |
| *TR-4C* | *Transceiver, 300 Watt high frequency single-sideband unit covers the 80 meter through 10 meter amateur bands. Includes AM and CW modes, a linear, permeability-tuned VFO and two 8-pole crystal lattice filters.* |
| *L-4B* | *Linear Amplifier, built for continuous duty at full capacity. 2000 Watts PEP on SSB. 1000 Watts on AM, CW and RTTY. Covers the 80 meter through 10 meter bands.* |
| *C-4* | *Station Console, matches Drake's T-4XC, R-4C and TR-4C.* |
| *MN-4* | *Antenna Matching Network, matches 50 Ohm transmitter output to coax antenna feedline with VSWR up to 5:1. An integral Wattmeter reads forward power in Watts and VSWR directly. 200 Watts continuous duty output.* |
| *MN-2000* | *Antenna Matching Network. Same as MN-4 except: 1000 Watts continuous duty output (2000 Watts PEP) and 3 antenna connectors switch-selectable from front panel.* |
| *W-4* | *Wattmeter, reads forward and reflected power directly in Watts (VSWR from nomograph). Range: 200 and 2000 Watts full scale, 1.8 to 54 MHz.* |
| *WV-4* | *Wattmeter, reads forward and reflected power directly in Watts (VSWR from nomograph). Range: 100 and 1000 Watts full scale, 20 to 200 MHz.* |
| *TR-22C* | *Transceiver, 2 meter VHF-FM, portable. Twelve channels, self-contained batteries and attached microphone.* |
| *RCS-4* | *Remote Coax Switch, provides remote selection of up to five antennas, using only one main feedline. Allows grounding of unused antennas. Motor driven switches controlled from station located console.* |
| *SSR-1* | *General Coverage Receiver, 0.5-30 MHz continuous. All solid state.* |

*For information on any of our products, please feel free to write our Sales Department, 540 Richard Street, Miamisburg, Ohio 45342 or call direct, 513-866-2421.*



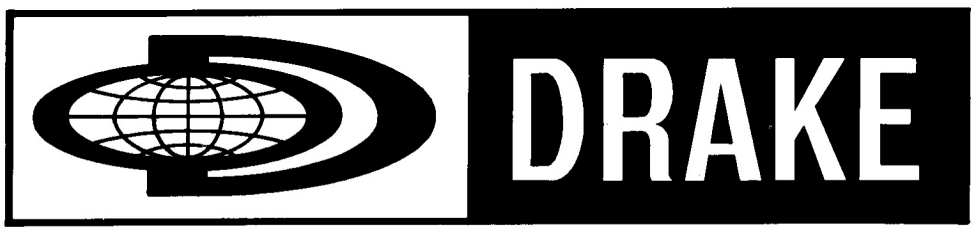
DRAKE